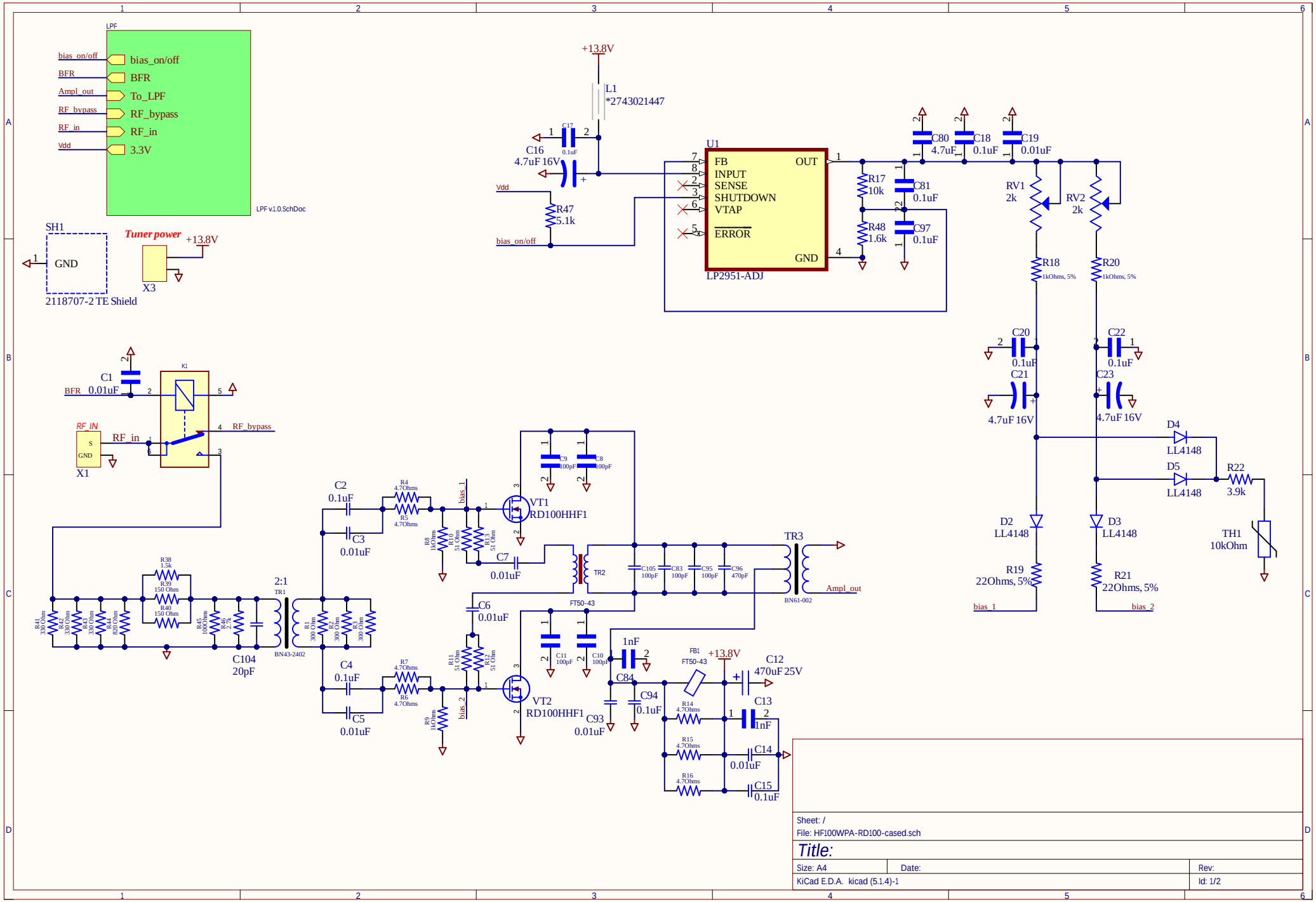

Sheet: /
File: HF100WPA-RD100-cased.sch

Title:

Size: A4	Date:	Rev:
KiCad E.D.A. kicad (5.1.4)-1		Id: 1/2

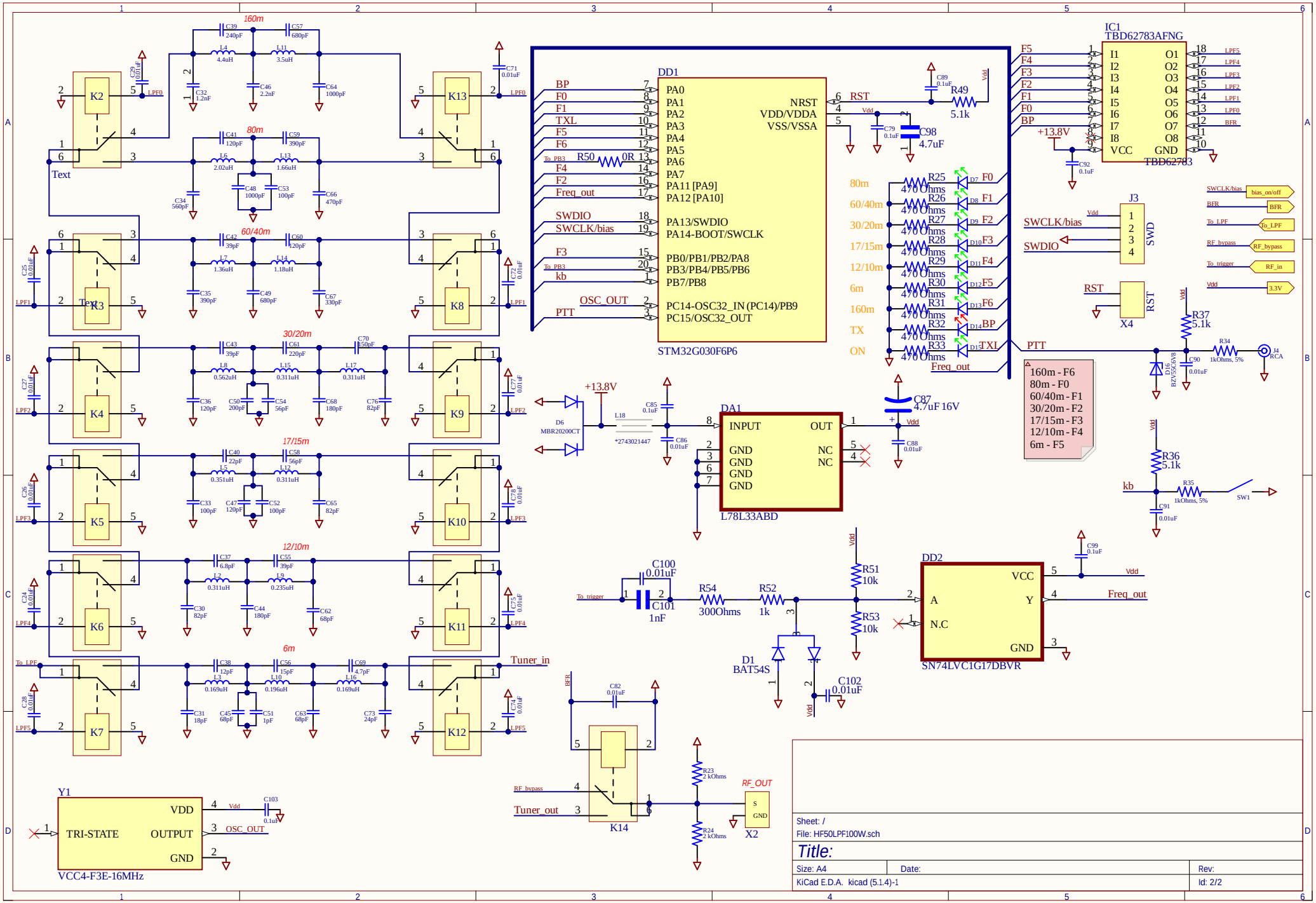
160m
80m
60/40m
30/20m
17/15m
12/10m
6m
Text
Tuner_in
DD1
STM32G030F6P6
IC1
TBD62783AFNG
TBD62783
J3
SWD
X4
RST
J4
RCA
DA1
L78L33ABD
DD2
SN74LVC1G17DBVR
Y1
VCC4-F3E-16MHz
K14
X2
RF_OUT
160m - F6
80m - F0
60/40m - F1
30/20m - F2
17/15m - F3
12/10m - F4
6m - F5
Sheet: /
File: HF50LPF100W.sch
Title:
Size: A4
Date:
Rev:
KiCad E.D.A. kicad (5.1.4)-1
Id: 2/2